rafeed LED E series

رفيد ليد الفئة أي

MAHI Spotlight MH60260-A

ماهي

Mahi spotlight is used for tight places and for fixed lighting purposes, it gives nice reflection for light on any wall.

Available in several colors of light : red, pink, green, blue.

Housing : Aluminum outside and inside **or** Plastic outside and Aluminum inside.

ماهي سبوت لايت يمكن إستخدامه في الأماكن الضيقة وللإنارة الثابتة، يعطي إنعكاسا جميلا للضوء على الجدران.

متوفر بعدة ألوان ضوئية : أحمر , أزرق , زهري , أخضر .

الهيكل مصنوع من الألمنيوم من الداخل و الخارج

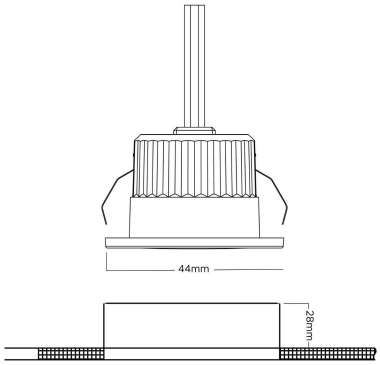

2 Years Warranty | IP20 | CB | CB

Power 3 W

Lumen 240 lm

Input Voltage 220-240 V AC product

Frequency 50/60 Hz

PF 0.45

LED type SMD

Color Temperature 6000

Lumen Efficiency 80 lm/W

Beam Angle 38°

CRI 80

Dimming Method not dimmable

Materials

Color

Dimension (D x H) 44 x 28 mm

Cut Out 35 mm

Working temperature -20 C° to +40 C°

Installation way Recessed

Applications Offices, Hospitals & Clinics, Supermarkets, Schools, Showrooms, Government institutions, Restaurants, Hotel

visit product on website

Luminous flux and connected electrical load are subject to an initial tolerance of +/- %10. Tolerance of color temperature +/- 150 K. Unless stated otherwise, the values apply to an ambient temperature of 25° C.
We reserve the right to make technicale changes without prior notice. Visit us www.rafeed.co